rev.	revision text	rev.date	rev.by	apr. date	apr. by
02	general simplification	2023-12-14	Rutland	2023-12-19	McNaeb

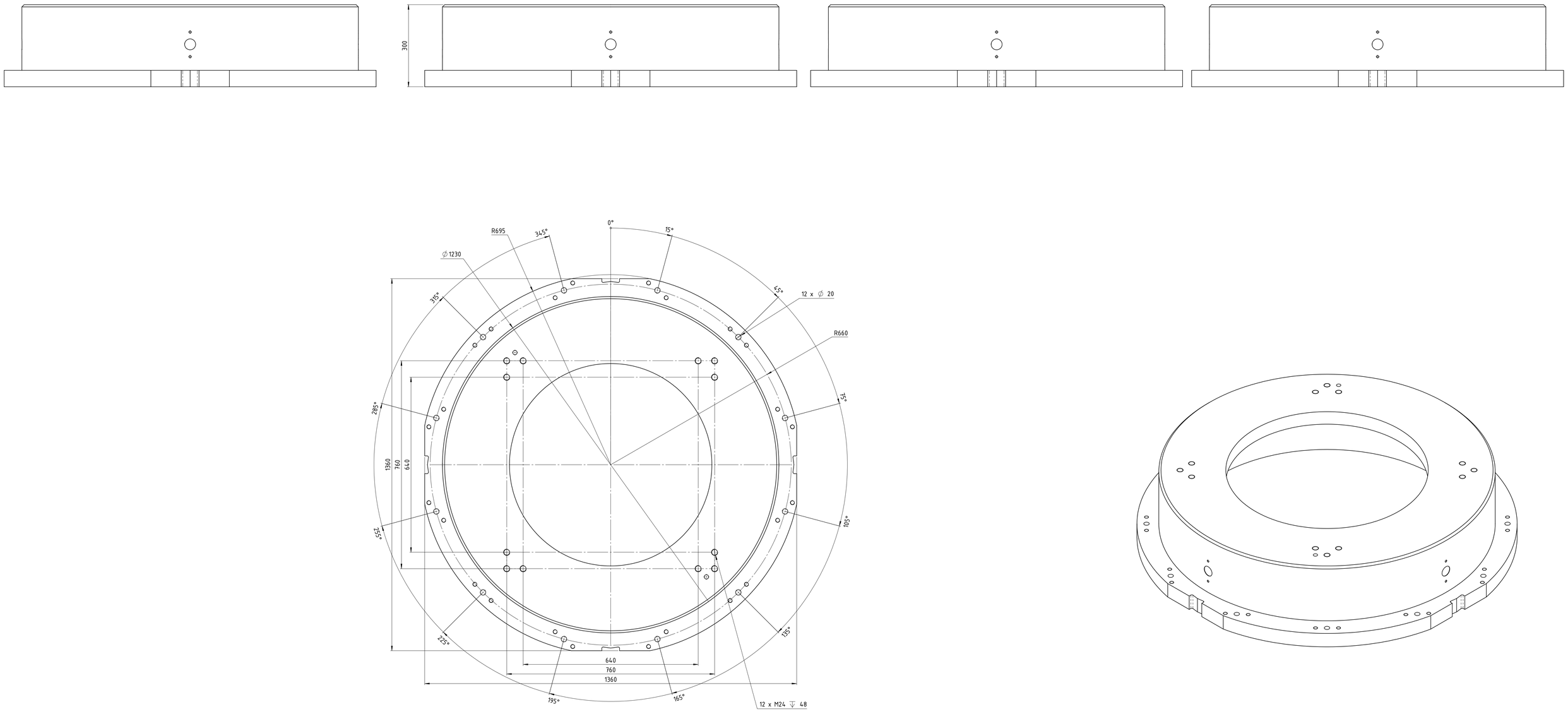

The reproduction, distribution and utilization of this document as well as the communication of its contents to others without express authorization is prohibited. Offenders will be held liable for the payment of damages. All rights reserved in the event of the grant of a patent, utility model or design.

Status: Released		YASKAWA www.yaskawa.eu.com	dimension:
SAP EMEA no:	SAP AM no: 230790		weight: 511,568 kg
			created: 2023-07-19 McNaeb
			drawn: 2023-07-19 McNaeb
			approved: 2023-07-19 RaiSaid
			sheet: A0
title / description: robot stand T-300			drawing-no.: 0001060837-100
			revision: 02
			15 / 4/5