rev:	revision text:	rev.date:	rev.by:	aprv. date:	aprv. by:
03	improved cutline	2023-07-18	MicNaeb	2023-07-18	RaiSeid
04	general simplification	2023-12-20	KaiGünd	2023-12-20	MicNaeb
05	Ausschnitt oben geändert	2025-04-24	SimHube	2025-04-24	MicNaeb
06	hole pattern updated	2025-04-25	SimHube	2025-04-25	MicNaeb
07	Center mark and drillings changed	2025-07-11	SimHube	2025-07-14	MicNaeb

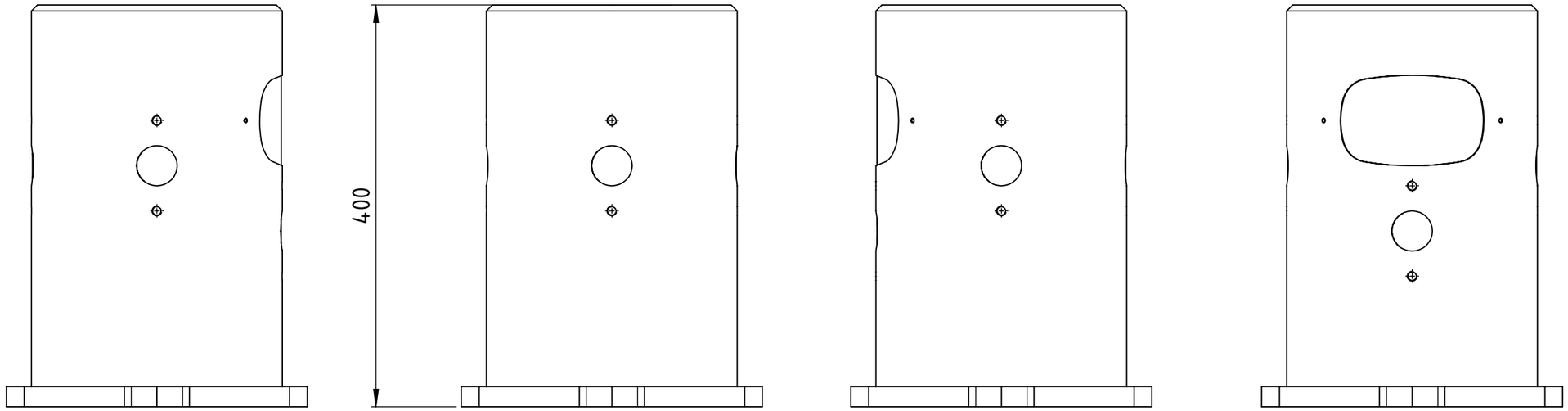

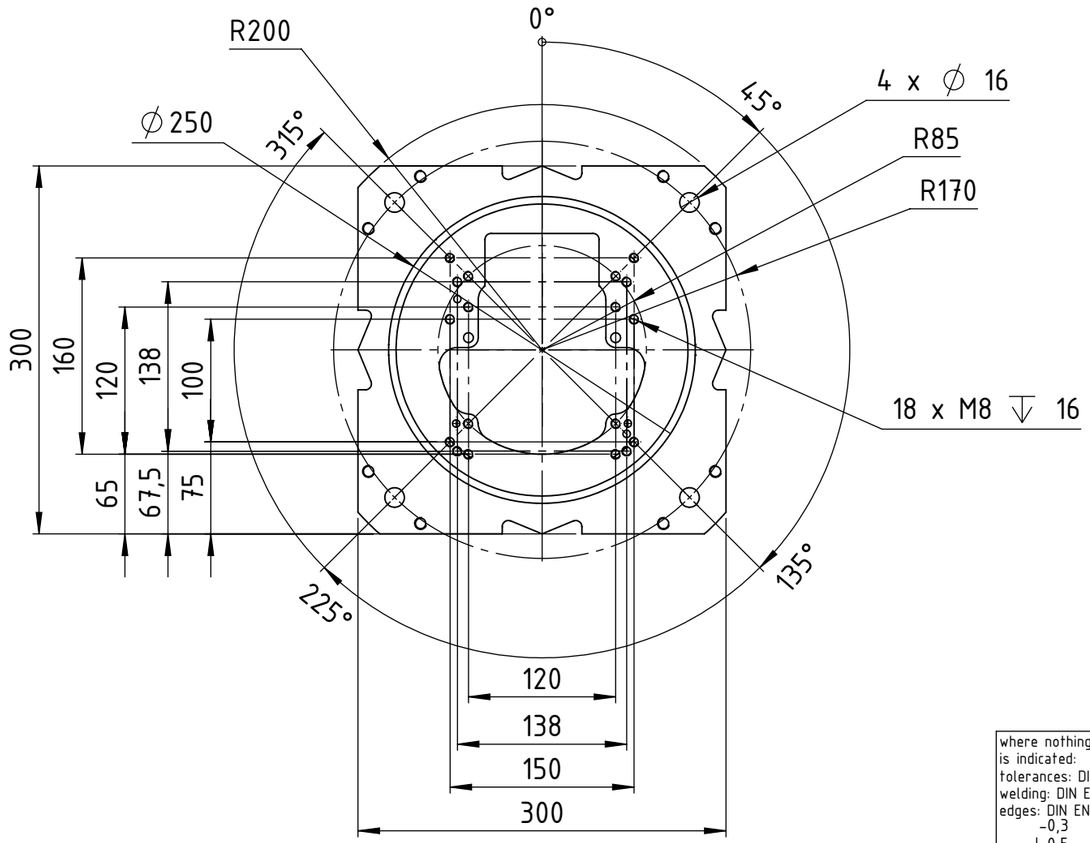

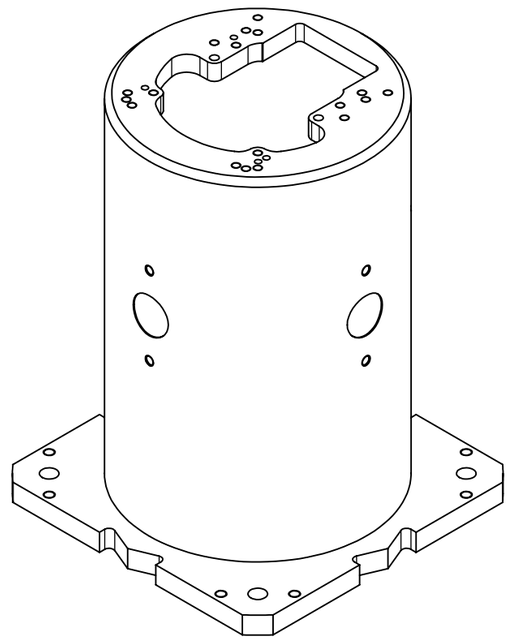

where nothing else is indicated:
tolerances: DIN ISO 2768-mH
welding: DIN EN ISO 13920-A
edges: DIN EN ISO 13715 -0,3 -0,5 +0,3

status: Released
SAP EMEA nr:
SAP AH nr: 219530
title / description: robot stand A-400

YASKAWA
www.yaskawa.eu.com

dimension: 400x300x300 mm		weight: 18,034 kg	
created:	2021-07-29	MicNaeb	
drawn:	2021-07-29	MicNaeb	sheet: A3
approved:			
drawing-nr.: 0000107778-100		revision: 07	1:5 4/5

CONFIDENTIAL! The reproduction, distribution and utilization of this document as well as the communication of its contents to others without express authorization is prohibited. Offenders will be held liable for the payment of damages. All rights reserved in the event of the grant of a patent, utility model or design

CAD2D-drawing filename: Draw1 version: , last visualized: // CAD-3D-model filename: $PRPSHEET:ISW-Dateiname(File Name)), version: $PRPSHEET:IPTC_WM_REVISION(.$PRPSHEET:IPTC_WM_ITERATION), last saved: $PRPSHEET:ISW-Datum der letzten Speicherung(Last Saved Date)) // drawing frame date: 2023-03-10